Profile (not to scale):

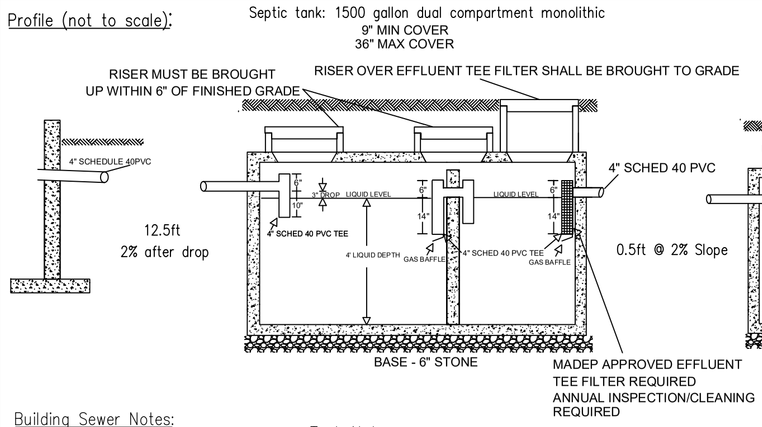

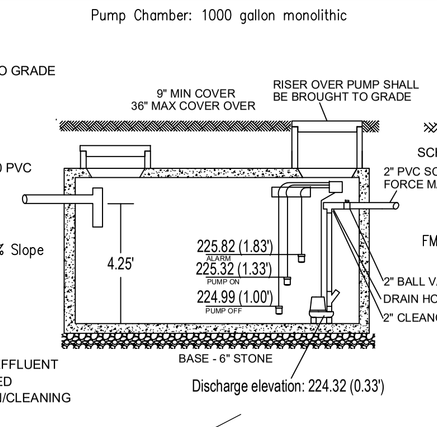

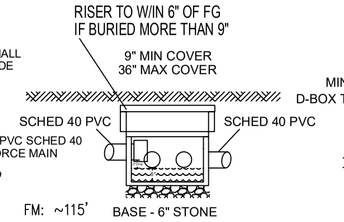

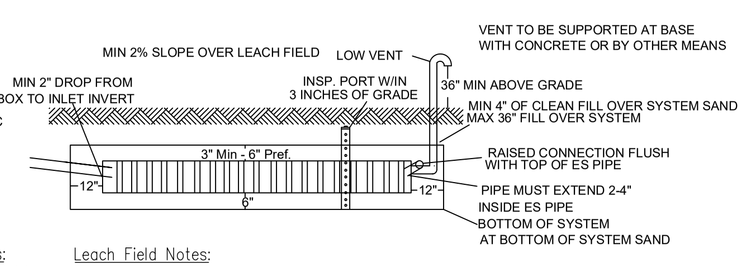

Building Sewer Notes:
1. Where portions of the existing building sewer are to remain, building sewer shall be inspected for slope, bellies, turns and anything which may prevent it from functioning as required by Title 5. Existing building sewer to remain must be of adequate materials per Title 5.

Tank Notes:
1. Manholes shall be minimum 24" diameter, medium duty or cast iron frame and cover, and any manholes brought to finished grade shall be secured to prevent unauthorized access.
2. Inlet and outlet tees to rectangular tanks shall be set in the end walls or into a side wall within 12 inches of the end wall.

Distribution (Dbox) Box Notes:
1. Dbox must have a water tight cover.
2. Dbox must have inlet tee.

Leach Field Notes:
1. Fill shall be free of clay, tailings or stones larger than 6"
2. Trees should be removed if the roots could reach the leach field, or an impervious barrier should be placed in between field and tree.

1. System sand – 35% or less of the total sand may be gravel. 40% to 90% of the total sand is to be coarse to very coarse sand. No gravel shall exceed ¾" in diameter. No gravel shall pass a #10 sieve. No coarse sand shall pass a #35 sieve. No more than 2% of the total sand may pass through a #200 sieve. ASTM C–33 (Concrete sand) is an alternate acceptable materials for use as system sand.
2. Title 5 surrounding sand – Shall meet requirements of 310 CMR 15.255(3). Sand shall be comprised of clean granular sand, free from organic matter and deleterious substances and shall not contain Remediation Waste. Fill shall not contain any material larger than 2 inches. Up to 45% by weight of fill material may be retained on the #4 sieve. Sieve analysis must comply with the following chart:

SIEVE SIZE	EFFECTIVE PARTICLE SIZE	% THAT MUST PASS SIEVE
# 4	4.75 mm	100%
# 50	0.30 mm	10% - 100%
#100	0.15 mm	0% - 20%
#200	0.075 mm	0% - 5%

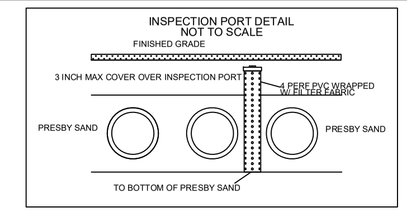

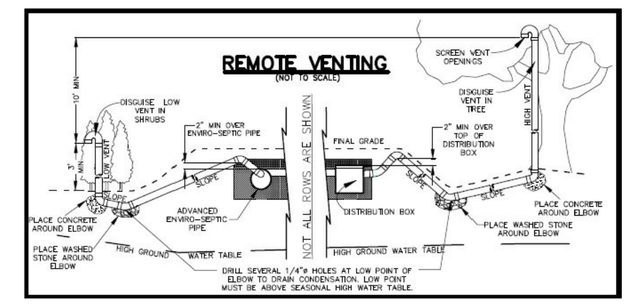

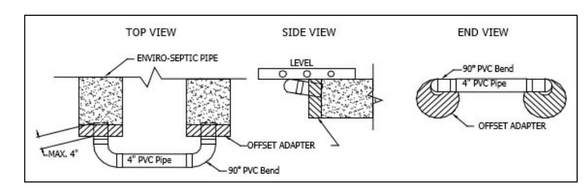

Locus No Scale

Soil Data

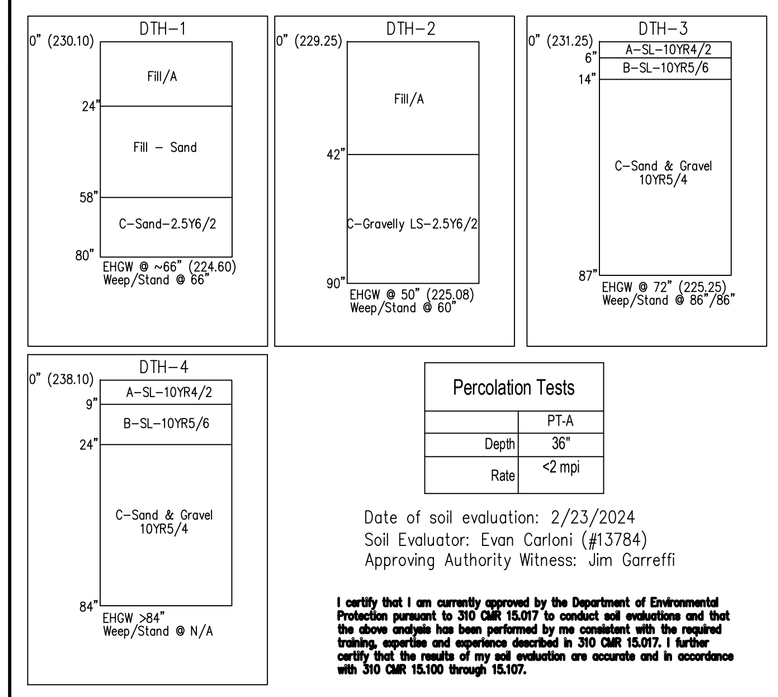

Percolation Tests	
	PT-A
Depth	36"
Rate	<2 mpi

Date of soil evaluation: 2/23/2024
Soil Evaluator: Evan Carloni (#13784)
Approving Authority Witness: Jim Garreffi

I certify that I am currently approved by the Department of Environmental Protection pursuant to 310 CMR 15.017 to conduct soil evaluations and that the above analysis has been performed by me consistent with the required training, expertise and experience described in 310 CMR 15.017. I further certify that the results of my soil evaluation are accurate and in accordance with 310 CMR 15.100 through 15.107.

Pump Chamber Notes

1. Liberty FL30 Pump or comparable.
2. Pump and Alarm shall be on separate circuits.
3. System shall be pressure tested before being backfilled.
4. All wiring shall be in compliance with local and state codes and shall be installed by a licensed electrician.
5. The control panel shall have an audible alarm placed in a readily accessible location.
6. Pump must be installed in accordance with manufacturers recommendations.
7. 613 Gallons of emergency storage between alarm float and pump chamber invert.
8. Pumps, alarms and other equipment requiring period or routine inspection and maintenance shall be operated, inspected and maintained in accordance with the manufacturer's specifications. This inspection and maintenance shall be performed no less than annually, and must be submitted to the approving authority annually by Jan. 31st of each year for the previous calendar year.

Dose: 7.00' x 4.83' x 0.33' x 7.5 gal/cub. ft = 83 gallons per dose
Runback: ~115 LF FM = 1.15 x ~17.4 gals/100' = 20 gallons
83 gallons – 20 gallons = 63 gals/dose

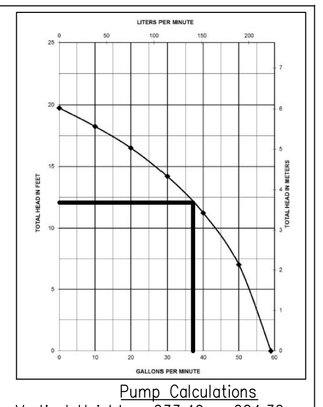

Pump Calculations
Vertical Height = 233.40 – 224.32 = 9.08'
Friction Loss
115 ft 2" SCHED 40 PVC Pipe @ ~35 GPM = ~2.2'/100'x (115' + 15' fittings) = 2.86'
Total pump head: 9.08' + 2.86' = 11.94'

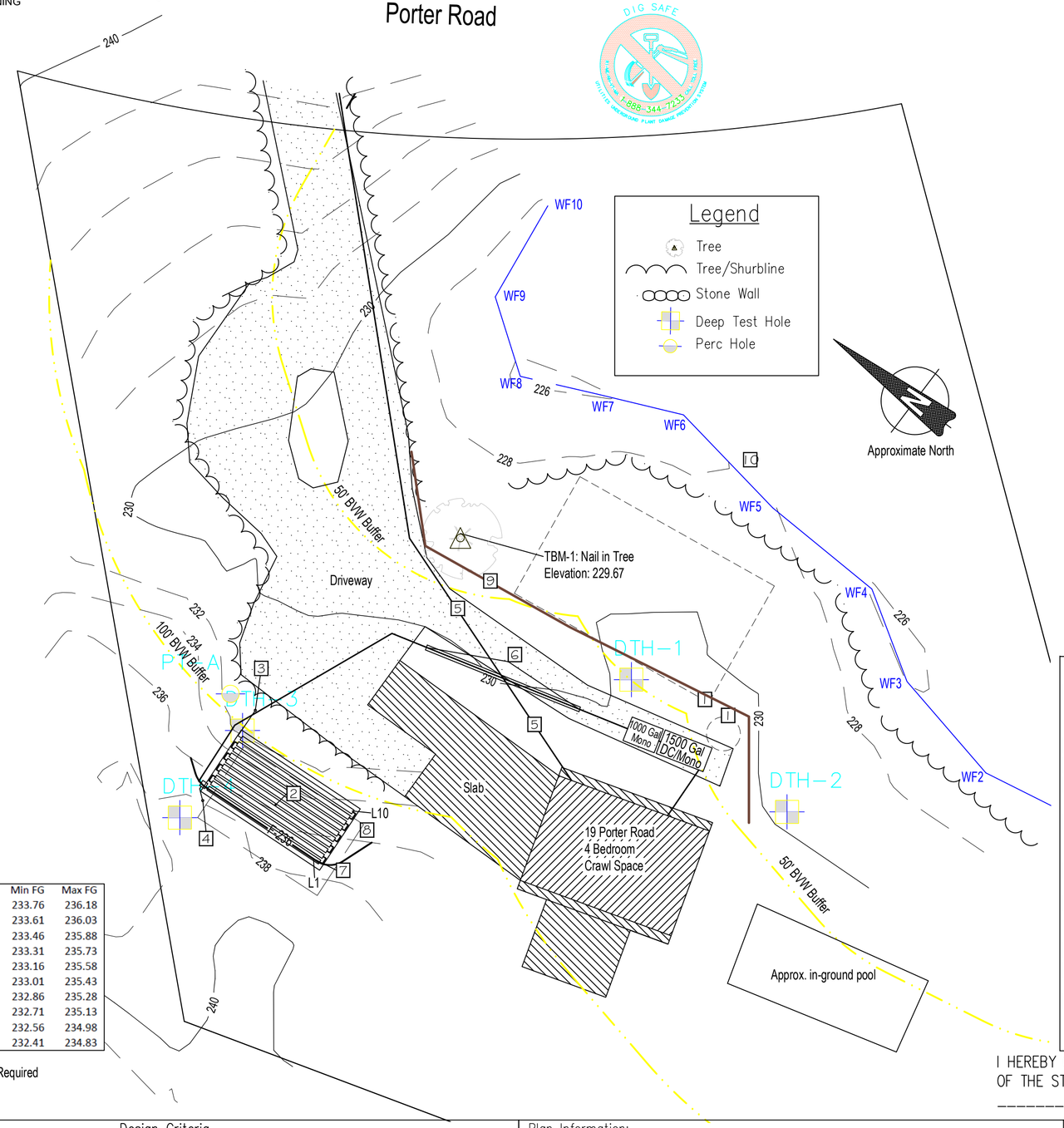

Plan View Notes
1. Existing tank and leach field *Existing system to be abandoned per 310 CMR 15.354.
2. Inspection port
3. Low vent - 3' high
4. High vent - min 10' higher than low vent.
5. Approx. water line based on markings provided by water district & entrance into dwelling. Verify upon construction.
6. Sleeve forcemain where closer than 10' to water line
7. Existing grade to be lowered on high side of field to meet 3' maximum grade over top of Presby ES tubes
8. Extent of conventional proof primary
9. Erosion control/limit of work - see "Construction Notes" Note 7.
10. The flood plain elevation noted on the FIRMETTE is at the 226 elevation. Septic work is to take place at 230 and above.

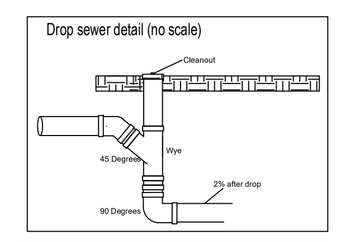

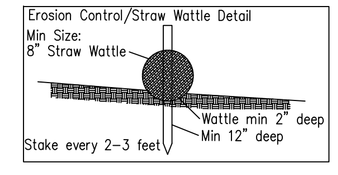

Proposed Presby Elevations

	4" Inlet	Presby Invert	Bottom Sys Sand	Min FG	Max FG
Line 1	232.76	232.18	231.68	233.76	236.18
Line 2	232.61	232.03	231.53	233.61	236.03
Line 3	232.46	231.88	231.38	233.46	235.88
Line 4	232.31	231.73	231.23	233.31	235.73
Line 5	232.16	231.58	231.08	233.16	235.58
Line 6	232.01	231.43	230.93	233.01	235.43
Line 7	231.86	231.28	230.78	232.86	235.28
Line 8	231.71	231.13	230.63	232.71	235.13
Line 9	231.56	230.98	230.48	232.56	234.98
Line 10	231.41	230.83	230.33	232.41	234.83

Slope 10% = 3' System Sand Extension NOT Required

Schedule of Elevations		
Elevation	Proposed	As-Built
Invert @ Building:	229.50	
Tank Inlet:	228.50	
Tank Outlet:	228.25	
Pump Chamber Inlet:	228.24	
D-Box Inlet:	233.40	
D-Box Outlet:	233.23	

I HEREBY CERTIFY THAT THIS PLAN MEETS ALL REQUIREMENTS OF 310 CMR 15.000, TITLE 5 OF THE STATE ENVIRONMENTAL CODE AND ALL APPLICABLE REGULATIONS OF THE TOWN OF Littleton BOARD OF HEALTH.

Buoyancy	Buoyancy
Tank: 1500 Gallon Dual Compartment Mono (Wachusett) = ~12,500 lbs Downward force backfill = 11.25' x 5.67' x 0.75' x 74lbs/CF = 3,540 lbs 12,500 lbs + 3,540 lbs = 16,040 lbs Tank below EHGW: 0.77' Upward force on tank in water table = 11.25' x 5.67' x 0.77' x 62.5 lbs/CF = 3,070 lbs 16,040 lbs > 3,070 lbs = OK	Tank: 1000 Gallon Mono Pump Chamber (Wachusett) = ~8,500 lbs Downward force backfill = 7.50' x 5.67' x 0.75' x 74lbs/CF = 2,360 lbs 8,500 lbs + 2,360 lbs = 10,860 lbs Tank below EHGW: 1.51' Upward force on tank in water table = 7.50' x 5.67' x 1.51' x 62.5 lbs/CF = 6,007 lbs 10,860 lbs > 4,013 lbs = OK

I/A Info:
The Presby Enviro–Septic is proposed under remedial use approval. This design conforms to the approval and company design guidance.
Transmittal number: 21–CLM–000073–APP
Date of Issuance: Revised September 26, 2013, Modified October 30, 2019, Modified March 15, 2022

System must be installed and maintained as per the "Standard Conditions for Alternative Soil Absorption Systems with General Use Certification and/or Remedial Use" dated "Revised: March 5, 2018".

Construction Notes:
1. Contractor shall notify Dig Safe (888) 344–7233 at least 72 hours prior to construction or abandonment of existing system. It shall be the responsibility of the contractor to locate any utilities not delineated by Dig Safe.
2. Prior to the commencement of construction, the System Installer must certify in writing to the Designer, the LAA, and the System Owner that (s)he is a locally approved System Installer and, if required by the Company, is certified by or has received appropriate training by the Company.
3. All disturbed surfaces shall be restored with 4" of loam and seed.
4. All connections shall be glued.
5. Contractor shall notify designer and Approving Authority when conditions are found during construction which would alter the approved septic design plan.
6. Where portions of the existing building sewer are to remain, building sewer shall be inspected for slope, bellies, turns and anything which may prevent it from functioning as required by Title 5.
7. Notify Littleton Conservation Office at least 72 hours prior to construction for inspection of erosion control barrier.

Design Criteria
SAS Sizing Design Data:
Proposed 4 bedroom home @ 110 GPD/bedroom = 440 GPD
Perc Rate = <2 Minutes per inch
LTAR Title 5: 0.74 gpd/sqft
Conventional Size Required: 440 GPD/0.74 GPD/sqft = 595 sqft
Conventional Shown: 32' L x 19' W leach bed = 608 sqft

LTAR Presby ES min size: 400 sqft
Linear Feet of Pipe Req'd: 280'
Presby ES Field Provided: 32 ft x 19.5 ft = 528 sqft
10 lines @ 30 ft (300 lf)
1.5 (18") OC Spacing
1' system sand beyond ends of pipes
1' system sand beyonds edges of pipes

Tank Calcs:
Required: 440 GPD x 2 = 880 Gallons
Provided: 1500 Gallon Dual Compartment (200%/100%) Monolithic Tank
1000 Gallon Monolithic Pump Chamber

Plan Information:
1. This plan was created for the purposes of showing a proposed sewage disposal system and is NOT intended to be used for the reproduction of property lines. If property lines are in question, a survey should be performed by a Professional Land Surveyor.
2. This plan is for the design and construction of the sewage disposal facility only.
3. The underground utilities denoted on this plan are based off of markings from proper entities and available records. The Designer is not responsible for any subsurface structures not accurately depicted on this plan.
4. Water softener/roof runoff/sump pump discharge shall not be tied into proposed septic system.
5. This plan may not be revised without the consent of the Designer and without Local Board of Health approval.
6. All known wells within 150 feet of this system have been identified.
7. System shall be pumped per 15.351.
8. The designers only warranty is that the system was designed in accordance with Title 5 and the Local BOH regulations.
9. Boundary line information for this property stated on plan entitled "Plan of Land Littleton, MASS" Dated "July 23, 1971" by Clyds R. Wheeler Book 12080 , Page 304

Lot Information:
Water Source: Town water
Garbage Grinder: This septic system has NOT been designed for a garbage grinder. Any existing grinders shall be removed.
Nitrogen Sensitive Areas: Zone II – YES ; IWPA – no
Flood Plain: This property is located in a flood plain. MassMapper overlay below.

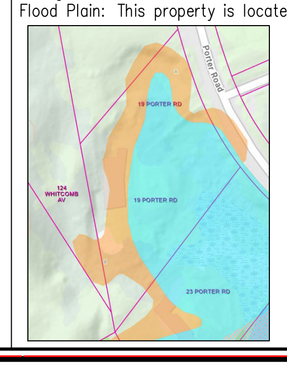

Sewage Disposal System Plan

19 Porter Road
Littleton, MA 01460
Existing 5 bedroom - Proposed 4 bedroom

Innovative Septic Design, Inc.
51 Carter Street,Berlin, MA 01503
Phone: (978) 621-8278
Email: isdinc15@gmail.com

COMMONWEALTH OF MASSACHUSETTS
EVAN J. CARLONI
No.1400
REGISTERED SANITARIAN

Assessors Map: R12 Lot: 8-B Lot Area: 1.16 acres

SAS Plan #: 02222401 Plan View Scale: 1" = 20'

Note: This plan and certification are for the design and construction of the sewage disposal system ONLY. This plan shall not be used for determination of property lines, locating of structures or any other use that would require a Professional Land Surveyors certification.

Updates	
Date	Update
2/29/2024	Proposed Plan
3/7/2024	Tank edit, design calc edit
5/7/2024	Add flood plain elevation note